PEARL DRUM PEDAL

P-2050C/B
P-2052C/B

Instruction Manual

Congratulations on your purchase!
To get optimum performance of your "P-2050C/B" / "P-2052C/B" Drum Pedal, please read this Instruction Manual before playing.

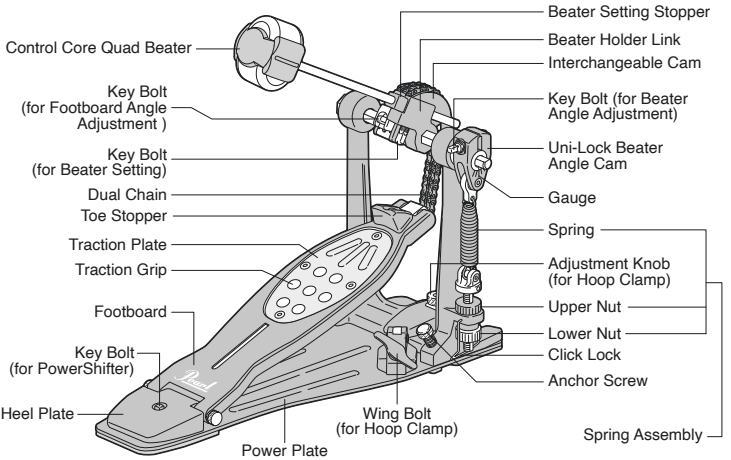

P-2050C/B

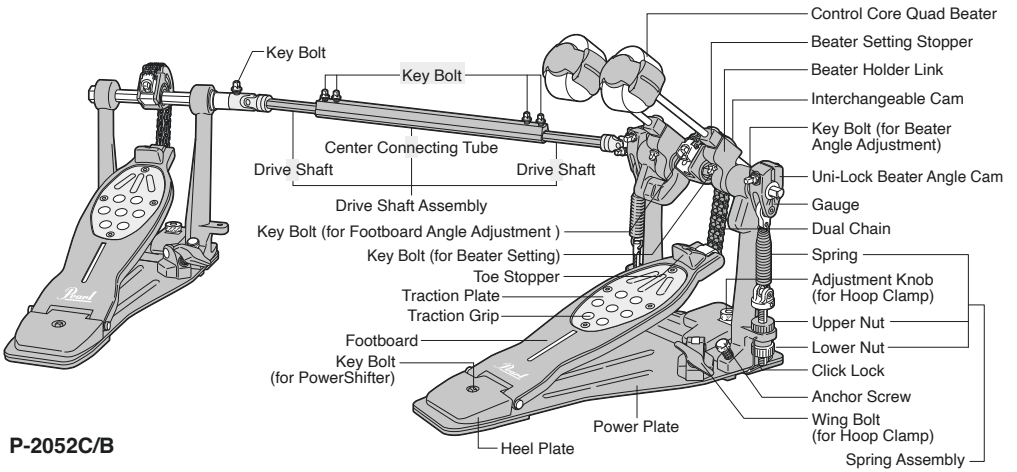

P-2052C/B

Beater Setting

Insert the Control Core Quad Beater into the Beater Holder Link with the desired face toward the bass drum head until it stops against the Beater Setting Stopper. Tighten the Key Bolt with a Tuning Key to secure (Fig.1-A). Make sure that the Beater Setting Stopper is flush against the Beater Holder Link (Fig.1-B). To adjust the height of the Quad Beater, loosen the Allen Screw on the Beater Setting Stopper with the provided hexagonal wrench. Set the Quad Beater to the desired height and re-tighten the Allen Screw (Fig. 1-C).

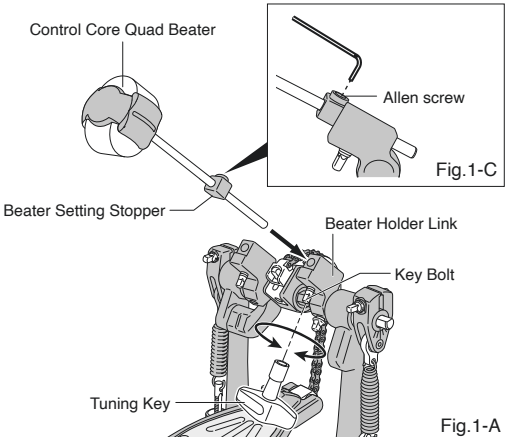

Fig.1-A

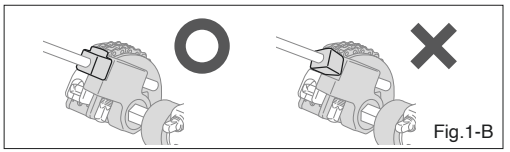
Fig.1-B

Tip

The Beater Setting Stopper preserves the height setting if the beater is removed when transporting the pedal.

Tip

In the initial factory setting, the Index Mark on the Beater Holder Link and Marking on the Shaft is aligned in the Window as shown (Fig. 2).

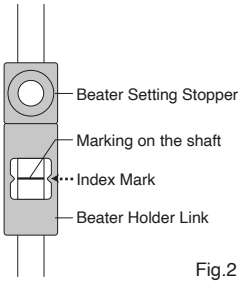

Fig.2

Beater Angle Adjustment

The beater angle can be adjusted by loosening the Key Bolt on the Uni-Lock Beater Angle Cam. Adjust to desired setting and tighten Key Bolt to secure. For small incremental changes or to index settings use the Gauge located on the Uni-Lock Beater Angle Cam (Fig.3).

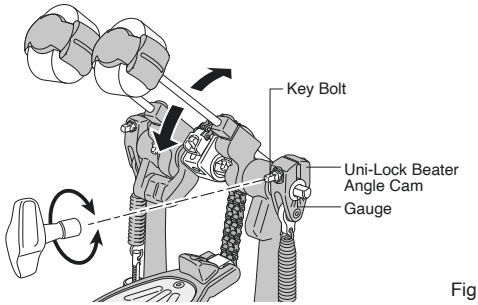

Fig.3

Control Core Quad Beater

The Control Core Quad Beater has four striking surfaces, each capable of producing a different sound. Please refer to the following chart to determine the sound best suited to your playing style (Fig. 4).

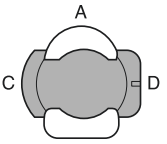

Fig.4

Surface	Surface Material	Contact Area	Sound
A	Felt	Vertical	Warm Sound with Sharp Attack
B	Felt	Horizontal	Warm Sound with Fat Attack
C	Plastic	Vertical	Bright Sound with Sharp Attack
D	Plastic	Horizontal	Bright Sound with Fat Attack

Footboard Angle Adjustment

To adjust the footboard angle, remove beater and loosen Key Bolt on the Drive Connector as shown (Fig.5). Slide the Drive Connector of the Chain or Belt to one of three positions, tighten the Key Bolt and replace beater.

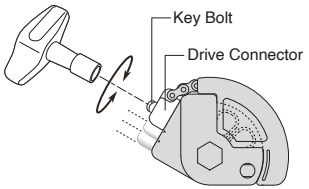

Fig.5

Spring Tension Adjustment

The “P-2050C/B” / “P-2052C/B” Pedal features our patented Click Lock spring tension retention system. To adjust the spring tension, disable the Click Lock by lifting the lever upward (Fig.6-B) and loosen the Upper Nut shown in (Fig. 6-A). To increase spring tension, turn the Lower Nut clockwise. To decrease spring tension turn the Lower Nut counter-clockwise. Once desired spring tension is achieved, tighten the Upper Nut against pedal frame firmly. To secure the setting, lower the Click Lock lever to engage the grooves around the Lower Nut until you feel the lever "Click." Before playing, make sure that both Upper and Lower Nuts are tight and the Click Lock lever is in a vertical position with both sides of the lever engaged in the grooves around the Lower Nut (Fig.7).

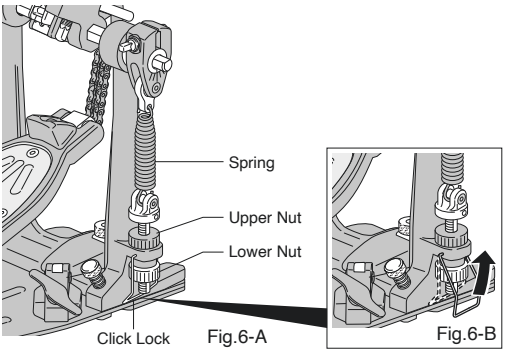

Fig.6-A

Fig.6-B

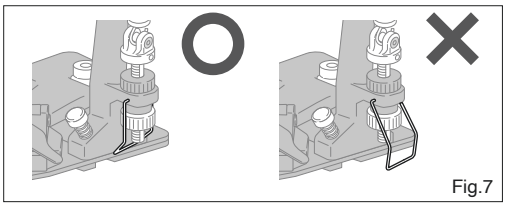

Fig.7

Removable Toe-Stop

The Toe-Stop may be removed for individual playing style. To remove simply unscrew Key Bolt and remove Toe-Stop from footboard (Fig.8). Store in secure location for possible future use.

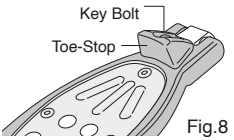

Fig.8

Anchor Screw

To prevent the bass drum from creeping forward while playing turn the Anchor Screws clockwise to extend the spikes downward into the floor (Fig.9).

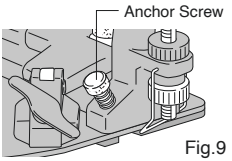

Fig.9

CAUTION

Recommended for carpeted surfaces only. Use on hard flooring may result in damage to the surface from spikes. Check to ensure spikes are retracted when used on these surfaces.

Hoop Clamp system

To attach your pedal to the bass drum, slide the bass drum hoop between the Hoop Clamp and the bottom lip of the pedal. Square the pedal and tighten the Wing Bolt to secure the pedal to the bass drum hoop. The Hoop Clamp system is fully adjustable and comes preset from the factory to accommodate a variety of hoop thicknesses. To adjust, use the hexagonal wrench provided to loosen the Allen Screw on the side of the Adjustment Knob. Rotate the Adjustment Knob until proper fit is achieved then tighten the Allen Screw to secure setting (Fig. 10).

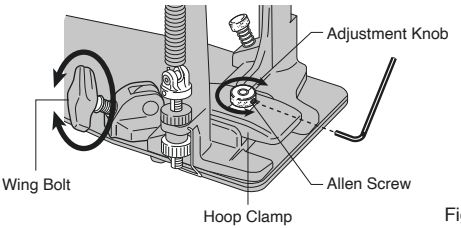

Fig.10

Note

If the heel of the pedal lifts while playing, loosen the Adjustment Knob to change the angle of the Hoop Clamp until the pedal remains flat.

Interchangeable Cam System

Our exclusive Cam System provides four interchangeable color-coded cams (black, white, blue and red) allowing you to quickly change the power and feel of the pedal to suit your individual playing style. From the factory, the Black Cam is mounted to the P-2052C Chain Drive Pedal.

To change Cams, push the Release Button on the Wheel housing and remove the Cam as shown (Fig.11). To attach the Cam, it is not necessary to press the Release Button, simply snap the Cam onto the Wheel as shown (Fig.12). Check to make sure that the Cam is seated correctly and is secure to the Wheel housing.

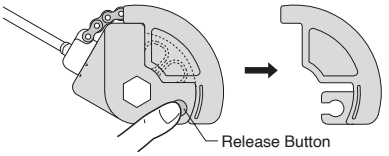

Fig.11

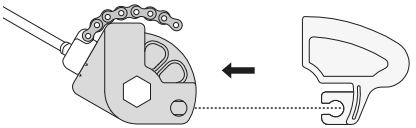

Fig.12

Note

- Do not force the Cam onto the Wheel. If needed adjust the position of the Cam to fit properly.
- Do not use the pedal without the Cam attached, damage may occur.



Black	*White*	*Blue*	*Red*

Black : Linear Action Cam

This is Pearl's original "perfect circle" Cam design. It offers superior power and a very natural, perfectly balanced action and smooth feel.

White : Oversized Linear Cam

The White Cam is a slightly over sized "perfect circle" Cam. It offers a very natural, smooth action, with great power and balance, with a slightly lighter pedal feel.

Blue : Progressive Cam

This is the very popular "off-center" axis type Cam design. It offers a light feel in the beginning that accelerates with speed and power upon impact.

Red : Radical Progressive Cam

The Red Cam features an extreme "off-center" axis design. The action is similar to the Blue Cam but with a lighter feel at the beginning of the stroke.

Traction Grip and Traction Plate Adjustment

The Traction Grip dots can be totally removed or inserted as needed to custom tailor the amount of traction for your personal playing style. To remove the Traction Grip dots, loosen the Allen Screws holding the Traction Plate with the provided hexagonal wrench and remove the Traction Plate from the footboard (Fig.13). The Traction Plate is also reversible to provide just the right amount of grip at either the front or rear of the footboard (Fig.14).

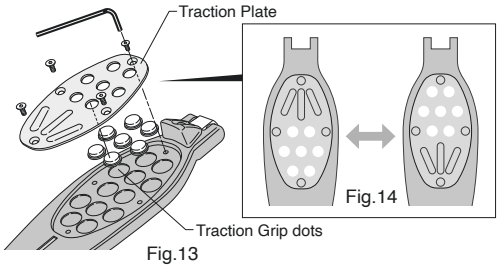

Fig.13

Fig.14

Note

When putting the Traction Plate back, finger-tighten the four screws to prevent cross-threading; then tighten the screws securely.
Do not use the Pedal without the Traction Plate mounted. It could cause injury to your foot.

PowerShifter

The PowerShifter function allows you to change the feel and action of the pedal by shifting the footboard position back and forth. To change the position, loosen the Key Bolt in the heel of the footboard and move the footboard to the desired position: A, B or C. Tighten the Key Bolt again (Fig.15).

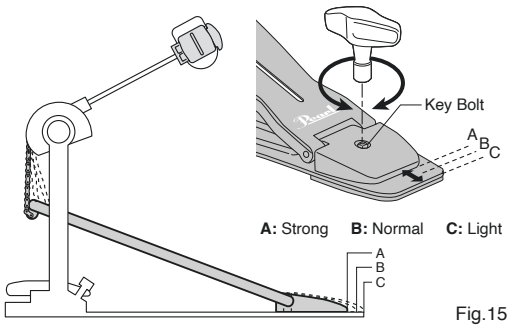

Fig.15

Note

Make sure that the heel is flush with the Power Plate to prevent damage to the pedal.

Connecting the Drive Shaft Assembly (P-2052C/B ONLY)

Connect the ends of the Drive shaft (A) to the short extensions (B) on the Main Pedal (Fig.16). Tighten the Key Bolts with a Tuning Key in order of the top (Key Bolt 1) and then the side (Key Bolt 2) and secure.

Use same method with (left) pedal (Fig.17). To ensure proper connection of the drive shaft rotate the Hexagonal Axle to have the flat surface of the short extension (B) facing upwards to fit into Joint (Fig.17).

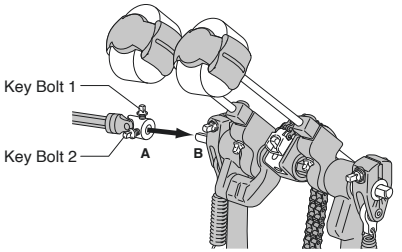

Fig.16

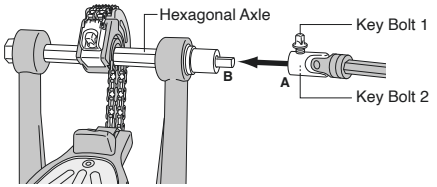

Fig.17

To adjust the length of the Drive Shaft Assembly, loosen the Key Bolts on the Center Connecting Tube. Adjust the length to your liking and make sure that both Drive Shafts are in equal length. Re-tighten the Key Bolts to complete the adjustment (Fig.18).

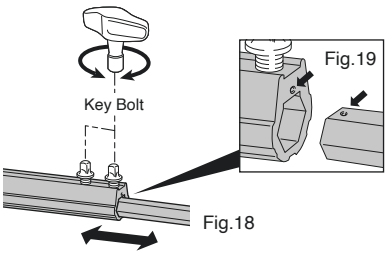

Fig.19

Fig.18

Note

If the Drive Shafts are extended too far, they will separate from the Center Connecting Tube. Reassemble them with the dots aligned as shown in Drawing (Fig.19).

Optional Items (sold separately)

- **Belt Assembly (BCA-250) / Chain Assembly (CCA-5)**

  Both the Belt and Chain Assemblies are interchangeable on all Eliminator pedals to provide easy conversion from chain or belt drive.

- **NiNjA Oil (OL-300)**

  The “P-2050C/B” / “P-2052C/B” Pedal features precision NiNjA bearings for incredible speed and smoothness. To keep them functioning at their maximum speed and performance it's recommended that you apply genuine NiNjA Oil at regular intervals (Fig.20).

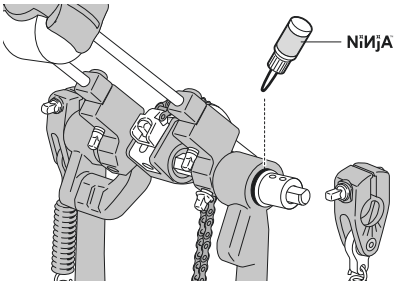

Fig.20

⚠ CAUTION

- Periodically check all Allen Screws for tightness and tighten them with the provided hexagonal wrench as needed.
- Periodically apply lube to all moving parts such as the Chain, Cam Roller, Footboard Hinge, etc. for optimal speed and extended life of your pedal.
- Only use NiNjA Oil on NiNjA bearings.

California Proposition 65

WARNING
Cancer and Reproductive Harm-
www.P65Warnings.ca.gov

Pearl

https://www.pearldrum.com

Products and specifications are subject to change without notice.

Printed in China
-Apr 2025-